LEBOTEC

Piling- and Drilling-Rigs

www.lebotec.nl
verkoop@lebotec.nl

Edisonstraat 47
6604 BT Wijchen

Tel: (0031)-(0)24-7111010

Mini Piling machine LBT-1.2-H

Lebotec the right
Piling Machines
for a solid Foundation

Technical data
Mini Piling Machine LBT-1.2-H

Type Machine: Mini Piling Machine with telescopic undercarriage and leader for fabricating piles with free-fall winch.

Dimensions……	
Transport width, width upper carriage	: 700 / 700 mm
Transport height	: 2.100 / 1.850
Transport length with/without aggregate	: 2.700 / 2.300
Min. Work height	: 1.750 mm
Length leader	: 2.500 mm (expanded)
Max. length leader with extensions	: 6.000 mm
Extensions	: free choice
Undercarriage……	
Undercarriage length	: 1.535 mm
Width Undercarriage in-/ out	: 700 / 1.100 mm
Track width	: 200 mm
Number of track rollers	: 4 each track
Stabilizers Slewing ring……	
Number stabilizers	: 3
Slewing ring (optional)	: 360 º
Winch……..	
Capacity main winch	: 1.200 kg
Type winch	: Free fall
Weight drop weight	: 300-1.200 kg
Capacity auxiliary winch	: 1000 kg
Operatingsystem	: Fully automatic pilling system
Powered by……..	
Electric motor	: 22 kW (optional 32 kW)
Weights……	
Total weight machine incl. shaved head	: 2.350 kg
Total weight powerpack	: 560 kg

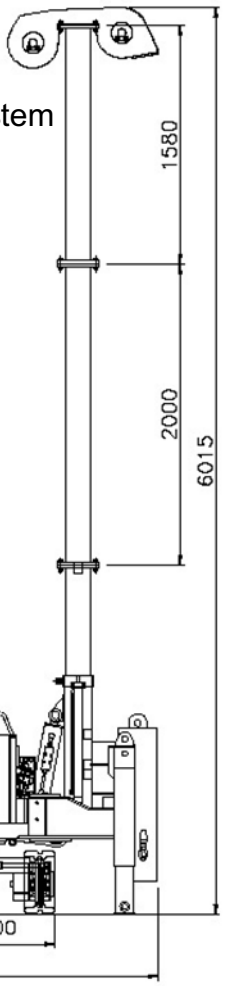

Any other versions on request.
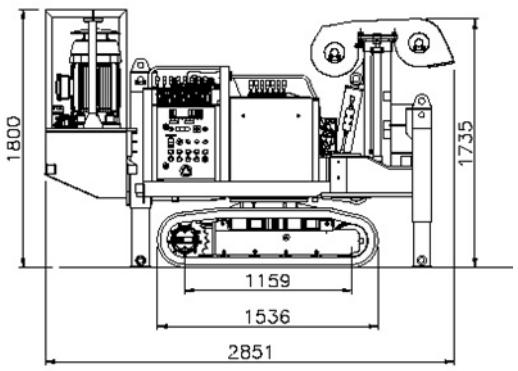
No rights can be derived from the stated specifications because during the development of machines certain specifications can be changed without written notice. Printing errors are reserved.